The supplier acknowledges that, with the acceptance of the drawing, he is in a position to manufacture the illustrated part in accordance with the drawing in reproducible from and series production. The parts selected manufacturing processes and the documents will also be in the state of the art. Insofar as this is not the case, he will inform us in advance in writing and in detail of the deviations and suggest alternatives. Insofar as this is not the case, he will inform us in advance in writing and in detail of the deviations and suggest alternatives.

This drawing may not be copied, reproduced or made available to third parties in any way whatsoever without or prior written approval.

Technische Daten/ technical data	:	Akkupack/ batterypack
Chemie/ chemistry	:	Lithium Ion
Zellenzahl/ no. of cells	:	3 Zellen/ cells INR18650-CQ-BAK; 3S1P
Kapazität/ capacity	:	nom. 2550mAh discharge at 0.2C min. 2500mAh discharge at 0.2C ta:20°C; EV(Discharge End Voltage): 2.75V per cell C=min capacity
Innenwiderstand/ impedance	:	------
Nominalspannung/ nominal voltage	:	10.8V
Standard Ladespannung/ standard charge voltage	:	12.6V±1%
Standard Entladespannung/ standard discharge voltage	:	8.25V
Nominaler Ladestrom/ nominal charge current	:	0.5C
Maximaler Ladestrom/ maximum charge current	:	1C
Ladeendstrom/ charge end current	:	0.01C recommended
Maximaler Entladestrom/ maximum discharge current	:	2.55A
Anwendungstemperaturbereich/ ambient temperature range	:	0°C...+45°C charge -20°C...+60°C discharge -20°C...+25°C storage max. 1 year -20°C...+45°C storage max. 3months
Selbstentladung/ self discharge	:	≤ 5% / month at20°C ≤ 10% / month at30°C ≤ 20% / month at40°C
Standards/	:	UN 3480, Subsection 38.3 All cells and batterypacks type tested according to UN manual of test and criteria subsection 38.3

Technische Daten/ technical data	:	Sicherheitsschaltung/ safety board	
Überladeschutzspannung/ over charge voltage detection	:	4.25V±40mV	per cell
Wiedereinschaltspannung/ over charge release voltage	:	4.13V±50mV	per cell
Entladeabschaltspannung/ over discharge detection voltage	:	2.8V±80mV	per cell
Wiedereinschaltspannung/ over discharge release voltage	:	3.0V±100mV	per cell
Nominaler Lade/Entladestrom / nominal operating current	:	3.35A	
Entlade Abschaltstrom/ discharge cut off current	:	10.0A± 1.5A	
Kurzschlussschutz/ short circuit protection	:	gegen äußeren Kurzschluss/ against external short circuit	
Temperarurschalter/ temperature switch	:	------	
MOSFET	:	im Pluszweig in positive path	
Rückstellkriterium/ release condition	:	Last trennen, Aktiv nach Anladen/ cut load, release after charging up	
Nettogewicht/ net weight	:	------	
Leiterplattenmaterial/ pcb material	:	FR4	
Standards	:	CE	

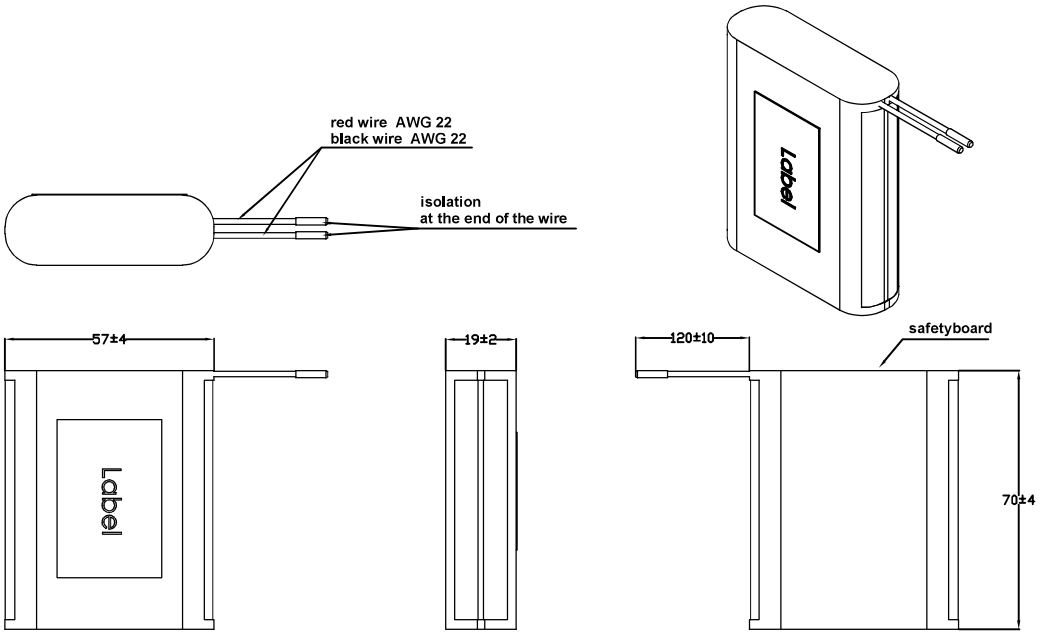

batterypack covered with 1 layer of blue shrinktube

Version	Change	Date	Name
V4	updated text font	2023,05,26	HONG
V3	Modify parameter remark	2022,03,03	HONG
V2	updated current parameter	2022,01,08	HONG
V1	updated parameter	2022,04,13	HONG
V0	---	2021,03,21	MST

Application range for inquiry

Allowable deviation general tolerances: DIN ISO 2768-m

Tolerance principle: ISO 8015

2021	Date	Name
Drawn by	23.02.	MST
Approved by		

Project: 710579

Model:

Material:

Scale (DIN A2): 1:1

All dimensions in mm

Weight:

Drawing name

Li-Ion-10.8V-2550mAh-3s1p-CQ-BAK

Drawing number / Part number: 2447-3031-50

Sheet 1/1

Replaced by:

Replacement through: